Features :

- 200 amps rated load
- Ceramic brazing technology is uesd to preventarcing leakage, fire and explosion
- No polarity requirement for contacts and coil
- RoHS compliant



Typical applications:

- DC high voltage high current applications
- Main contactors for hybrid, electrical vehicles and fuel-cell cars
- Battery charging systems

Contact Data

Contact arrangement	1form A
Rated voltage	1000V
Rated current	200A
Max.switch voltage	1000V
Min. recommended contact load	1A, 12VDC
Max.Breaking current	1500A,(600VDC,1cycle)
Contact resistance	≤0.5mΩ (at 20A)
Contact resistance	≤0.3mΩ (at 200A)
Operate/release time max.	30ms/10ms
Electrical endurance	Refers to electrical endurance graph

Auxiliary contact

Contact arrangement	/
Rated voltage	/
Rated current	/
Contact resistance	/

Contact ratings

		Current[A] on /off	Voltage[V] on /off	Switching cycles	ON:OFF
SEL200D-1000MXX2	Breaking:	0/1500	600	1	0.6s:5.4s
	Switching:	200/200	800	200	0.6s:5.4s
	Breaking:	0/150	1000	100	0.6s:5.4s
	Breaking:	0/20	1000	10000	0.6s:5.4s
SEL200D-750MXX2	Breaking:	0/200	750	750	0.6s:5.4s
		0/20	750	10000	0.6s:5.4s
SEL200D-450MXX2	Breaking:	0/200	450	750	0.6s:5.4s
		0/20	450	20000	0.6s:5.4s
Making:		140(1100uF)/0	20	7.5×10^4	0.6s:5.4s
Mechanical endurance		0.003/0.003	24	2×10^5	0.5s:0.5s

Insulation Data

Initial dielectric strength	
between open contacts	3000VAC 1min 1mA
between contact and coil	3000VAC 1min 1mA
between main and auxiliary contact	
max. Altitude	5500m
Insulation resistance	
between contact and coil	≥1000MΩ(1000VDC)
between open contacts	≥1000MΩ(1000VDC)

Coil Data

Coil voltage range: 12~48V

Coil versions, DC coil

(-40℃~85℃)

Rated voltage VDC	Operate voltage VDC	Release voltage VDC	Max. voltage VDC	Coil resistance at 23℃ Ω(1±10%)	Operating powers (at 23℃) (inrush,W)	Operating powers (at 23℃) (stable,W)
12	≤9	≥1.0	16	26.2	5.5	5.5
24	≤18	≥2.0	32	104.7	5.5	5.5
48	≤36	≥4.0	64	419	5.5	5.5

1) Max.allowable voltage refers to the maximum value in a varying range of operating power voltage, not a continuous voltage;
2) Unless specified otherwise, ambient temperature:23℃, on:off /0.6s: 5.4s;
3) If other types of rated coil voltage is needed, please contact us.

Other Data

Ambient temperature	-40℃ to +85℃
Ambient humidity	5% to 85% RH
Vibration resistance (functional)	10 to 500Hz, 49m/s^2 (5G)
Shock resistance[1)]	
Functional	Closed state:490m/s^2 (50G)
	Disconnected state: 98m/s^2 (10G)
Destructive	490m/s^2 (50G)
Terminal type	Connector (coil) and screw (load)
Weight	Approx. 300g
External dimension	75.5×36×66.6
Packaging unit	36pcs

1) No change in the switching state >10us.

Coil operating range

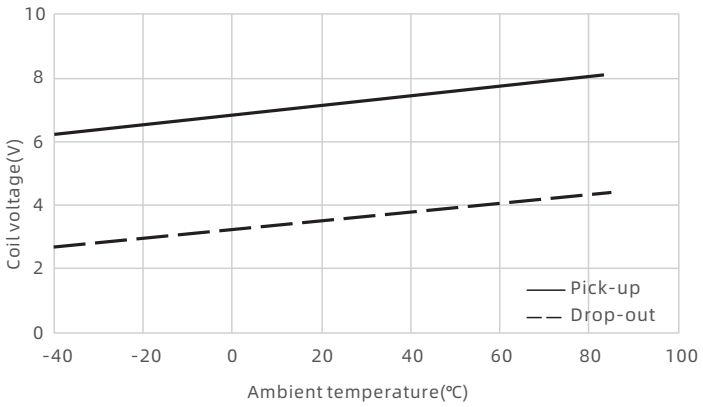

1)Coil supplied voltage 12VDC;

Tolerance curve

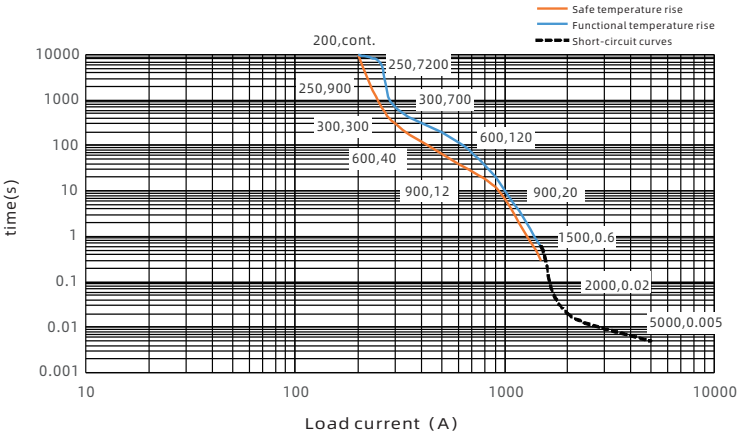

1)The upper limit of safety temperature is 180℃,and the upper limit of functional temperature is 150℃;
2)If the product needs to work for a long time, it is recommended that the product temperature should not exceed 150℃. If the safety temperature exceeds 180℃, the relay may be ignited;
3)Ambient temperature is 85℃, wire cross sectional area ≥60mm²;
(Test conditions for this curve)
4)Relay load current over 1500A is short circuit resistance performance. The relay can guarantee no fire or explosion within this curve.When the current is greater than 3000A, the relay contact may be repulsed by a large current.

Outline Dimensions: SEL200D-XXXMXXL2

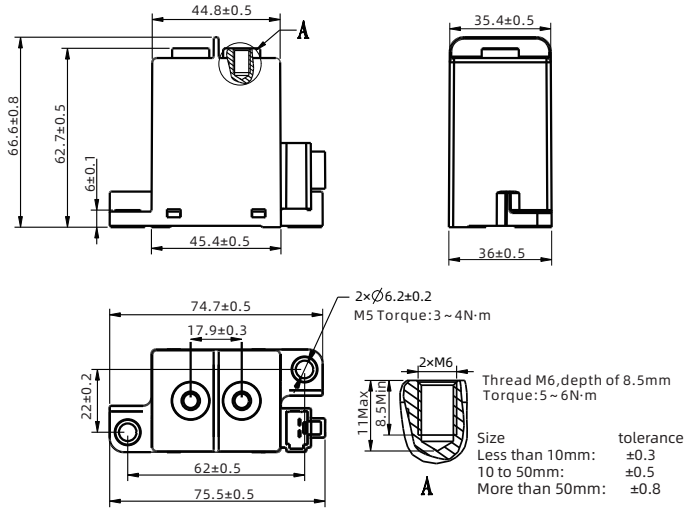

1) Maximum allowable torque as shown in the figure. One-time mounting only, no recurring screw fastening permitted;
2) Mount load connections first.

Outline Dimensions: SEL200D-HXXXMXX2

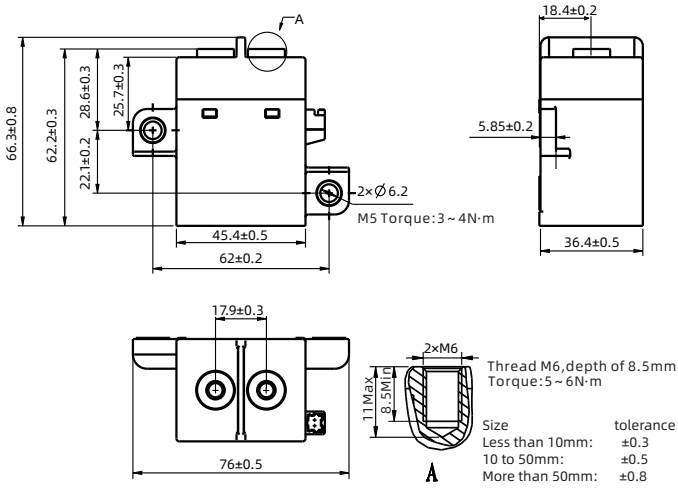

1) Maximum allowable torque as shown in the figure. One-time mounting only, no recurring screw fastening permitted;
2) Mount load connections first.

Installation Size Chart

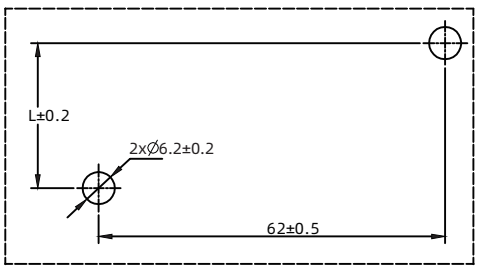

SEL200D-XXXMXXL2:L=22
SEL200D-HXXXMXX2:L=22.1

Schematic Diagram

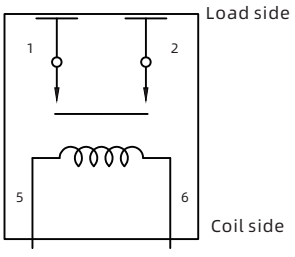

Note: No polarity on Load side and Coil side.

Schematic Diagram

Coil Connection Type: Connector (to be configured by the customer)

Yazaki
Connector housing model: 7283-1020
Crimping terminal: 7116-5041-02

THB
Connector housing model: 0435308
Crimping terminal: 01175

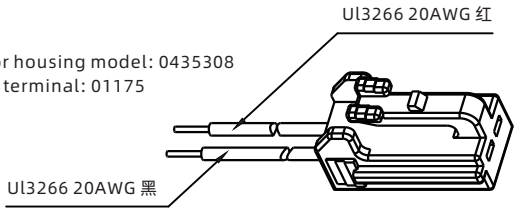

Product Code Structure

	SEL	200D -	□	M	□	□	2

Type designation
SEL

Series Code:
200D: 200A

Rated Load Voltage(VDC):
450: 450VDC 750: 750VDC 1000: 1000VDC

Contact Arrangement:
M: Form A

Rated Coil Voltage(VDC):
12: 12VDC 24: 24VDC 48: 48VDC

Installation size
L: The installation hole spacing is 62 * 22mm

Load connection type:
2: Internal thread

Customer special code:
Nil: No costomer special requirement
Numbers or Letters: Customer special requirement

Examples of Ordering Codes

SEL200D-1000M12L2	The load voltage is 1000V,Coil voltage 12V,vertical installation
SEL200D-H750M242	The load voltage is 750V,Coil voltage 24V,horizontal installation

Notes

●Mounting Precautions

1.By principle, please do not use it when the relay drops on the ground.

2.It's forbidden to use the product at the temperature beyond -40 ℃ ~ 85 ℃ for a long time as the relay contacts are sealed and filled with gas and when the contact temperature changes, the gas will break the ceramic sealed chamber .

3.When installing the relay, always use washers to prevent the screws from loosening.

4.Tighten each screw with given torque as suggested. Exceeding the maximum torque may result in screw loose, breakage, etc. When using screws, please make sure the washers are strong enough to prevent the case from deformation.

5.Avoid mounting the relay near strong magnetic fields or a heat generator .

● Precautions for connection of the load terminals

1.Please avoid excessive load applied to the product. If the product exceeds the rated range, the performance of the product cannot be guaranteed.

2.Please treat the relay as a product with limited life and replace it when necessary.

3.Be careful that foreign particles or oil attach on the terminals will lead to abnormal heating on terminals.

And below connectors or conductors with sizes are suggested.

10A	Min. 2mm^2 nominal cross-sectional area
20A	Min. 3mm^2 nominal cross-sectional area
40A	Min. 10mm^2 nominal cross-sectional area
60A	Min. 15mm^2 nominal cross-sectional area
100A	Min. 35mm^2 nominal cross-sectional area
150A	Min. 45mm^2 nominal cross-sectional area
200A	Min. 60mm^2 nominal cross-sectional area
250A	Min. 80mm^2 nominal cross-sectional area
300A	Min. 100mm^2 nominal cross-sectional area
400A	Min. 200mm^2 nominal cross-sectional area

●Precautions for connection of the coil

1.Please note that when using a diode, the release time will increase and the switching capacity may decrease. We recommend installing a surge protector varistor.

2.The pick-up voltage and drop-out voltage will change with ambient temperature, please use ratedvoltage to make sure the relay operate reliably. Don't exceed maximum coil voltage.

3.Please do not continuously apply maximum voltage on the coil.

4.Products with economizer, are recommend to use increase rapidly(phase step power supply mode)to drive the coil.

5.Products with economizer, the coil current will automatically switch after 0.1s. Please do not repeat switch the coil voltage at <0.1s,otherwise the Product performance can be not guarantee.

Disclaimer:

This datasheet is for customer's reference only.Sanyou had tried its best toensure the information accuracy but impossible to be avoided all the incorrects.The product specification and parameter might be change due to the product improvement.All of specification are subject to change without notice, please refer to the specification and samples.

We could not evaluate all the performance and parameters for every possible application. Thus the users should be in aright position to choose the suitable product for their own application. If there is any query, please contact Sanyou for technical service. However it is the users' responsibility to determine which product should be used only.

SANYOU CORPORATION LIMITED. All rights reserved by Sanyou.