Features:

- Suitable for the pre-charging system of new energy vehicles
- Rated 40A contact switching capability
- Optional PCB/QC terminal installation
- The housing is available in standard mounting and flange mounting options



Contact Data

Contact arrangement	1 Form A
Contact material	AgSnO2
Contact Resistance	≤5mΩ (@6V 20A)
Contact Rating (resistive load)	40A 450VDC
Max. Contact Voltage	800VDC (@2A)
Operate Time (at nominal volt.)	≤30ms
Release Time (at nominal volt.)	≤10ms
Bounce time (at nominal volt.)	≤5ms
Capacitive connection endurance (1)	1×10^3ops(200A 750VDC)
Resistive switching endurance (2)	1×10^3ops(40A 450VDC)
Resistive connection endurance (3)	1×10^5ops(40A 450VDC) 7.5×10^4ops(40A 1000VDC)
Current carrying capacity (4)	40A: continue
	60A: 1h
	80A: 20min
	160A: 30s
	240A: 10s
	400A: 0.6s

Note:
(1) @23℃, 750VDC, t=1ms, impact 200A, steady state 40A.
(2) @23℃, on: off=0.6s: 5.4s, and the copper bar cross-section is 6mm ².
(3) @23℃,on: off=0.6s: 5.4s, and the copper bar cross-section is 6mm ².
(4) @65 ℃, copper bar cross-section 6mm ².

Insulation Data

Insulation resistance	1000MΩ (500VDC)
Initial dielectric strength (Leakage current ≤ 1mA)	
Between open contacts	2500VAC,50/60Hz,1min
Between contact and coil	2500VAC,50/60Hz,1min

Other Data

Material compliance	EU RoHS/ELV, China RoHS, REACH
Temperature rise	< 75K, @40A, 65℃ (copper bar cross-section 6mm²)
Shock resistance	Functional 50G Destructive 100G
Vibration resistance	10~2000Hz, 57.9m/s²
Mechanical endurance	5×10^5ops
Ambient temperature	-40℃ to +85℃
Humidity	5% to 85%RH
Terminal Configuration	PCB, QC
Weight	< 50g
Noise	50dB (1m)
Protection Degree	Optional water trial type

Note: The above values are initial values

Coil Data

Nominal Voltage VDC	Max. Operate Voltage VDC	Min. Release Voltage VDC	Max. Allowable Voltage VDC	Coil Resistance (1±10%) Ω	Coil Power W	Holding Voltage
12	7.2	1.2	18	55.4	2.6	35% to 80% Nomi. Volt.(at 23℃) 40% to 60% Nomi. Volt.(at 85℃)
24	14.4	2.4	36	222		
48	28.8	4.8	72	886		

Note:
(1) To prevent the coil from overheating, do not continuously apply the maximum voltage for an extended period.
(2) The coil holding voltage is the voltage applied to coil 100ms after the rated voltage

Dimensions

QC ordinary shell type

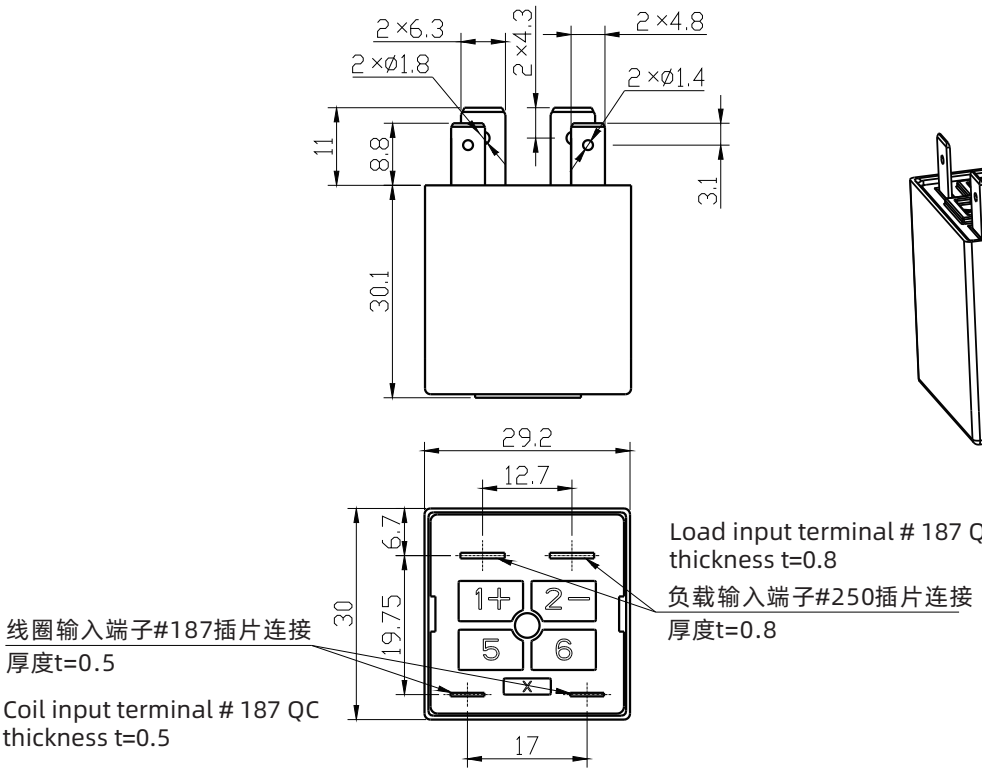

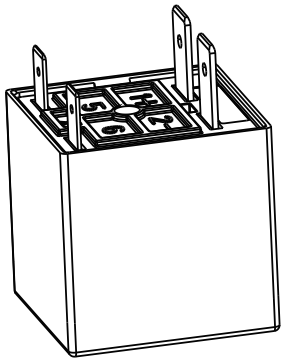

Size tolerance:
≤10 mm, tolerance is ±0.3 mm
10 ~ 50 mm, tolerance is ±0.5 mm
≥50 mm, tolerance is ± 0.8 mm

PCB ordinary shell type

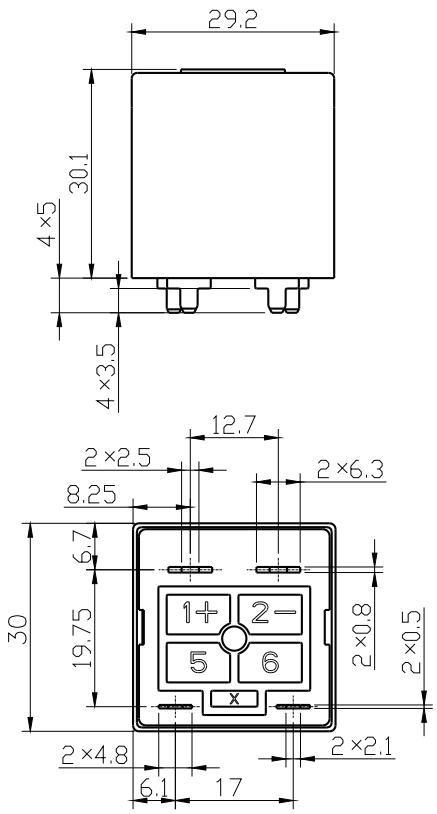

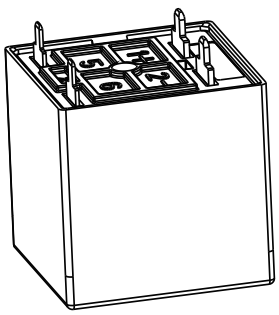

Size tolerance:
≤10 mm, tolerance is ±0.3 mm
10 ~ 50 mm, tolerance is ±0.5 mm
≥50 mm, tolerance is ± 0.8 mm

Dimensions

G-type shell

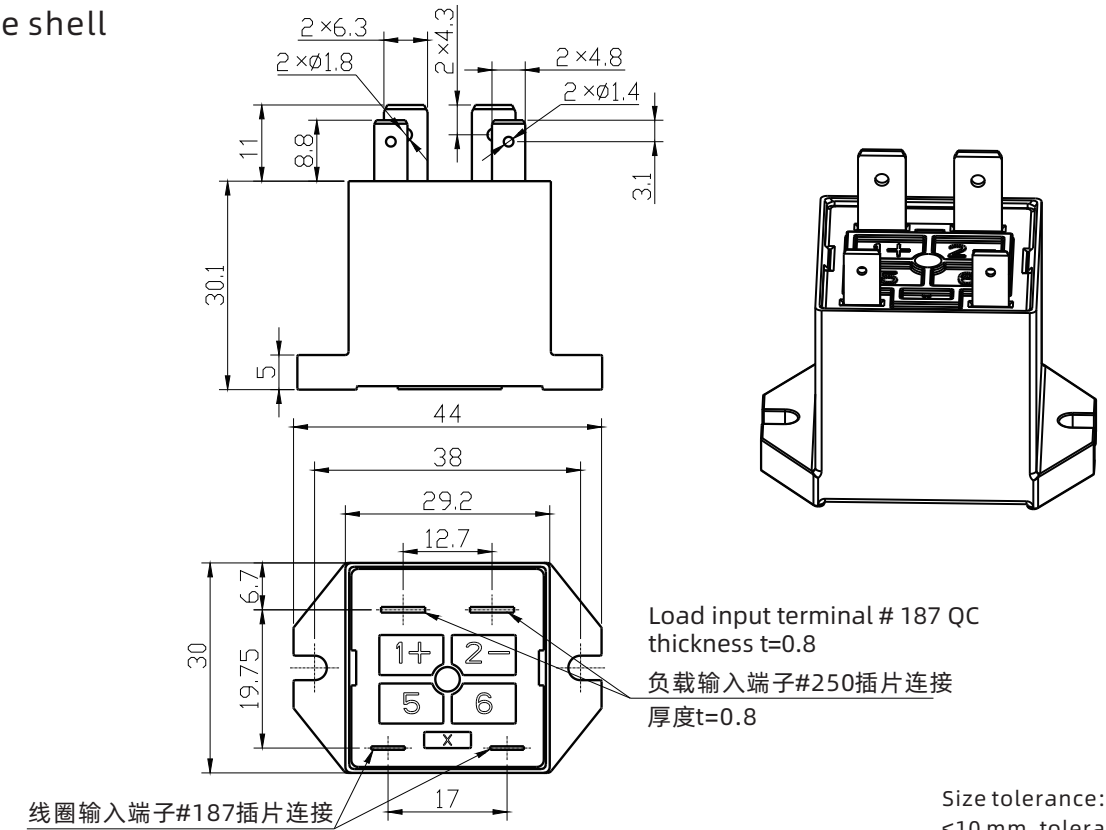

Load input terminal # 187 QC
thickness t=0.8

负载输入端子#250插片连接
厚度t=0.8

线圈输入端子#187插片连接
厚度t=0.5

Coil input terminal # 187 QC
thickness t=0.5

Size tolerance:
≤10 mm, tolerance is ±0.3 mm
10 ~ 50 mm, tolerance is ±0.5 mm
≥50 mm, tolerance is ± 0.8 mm

G2-type shell

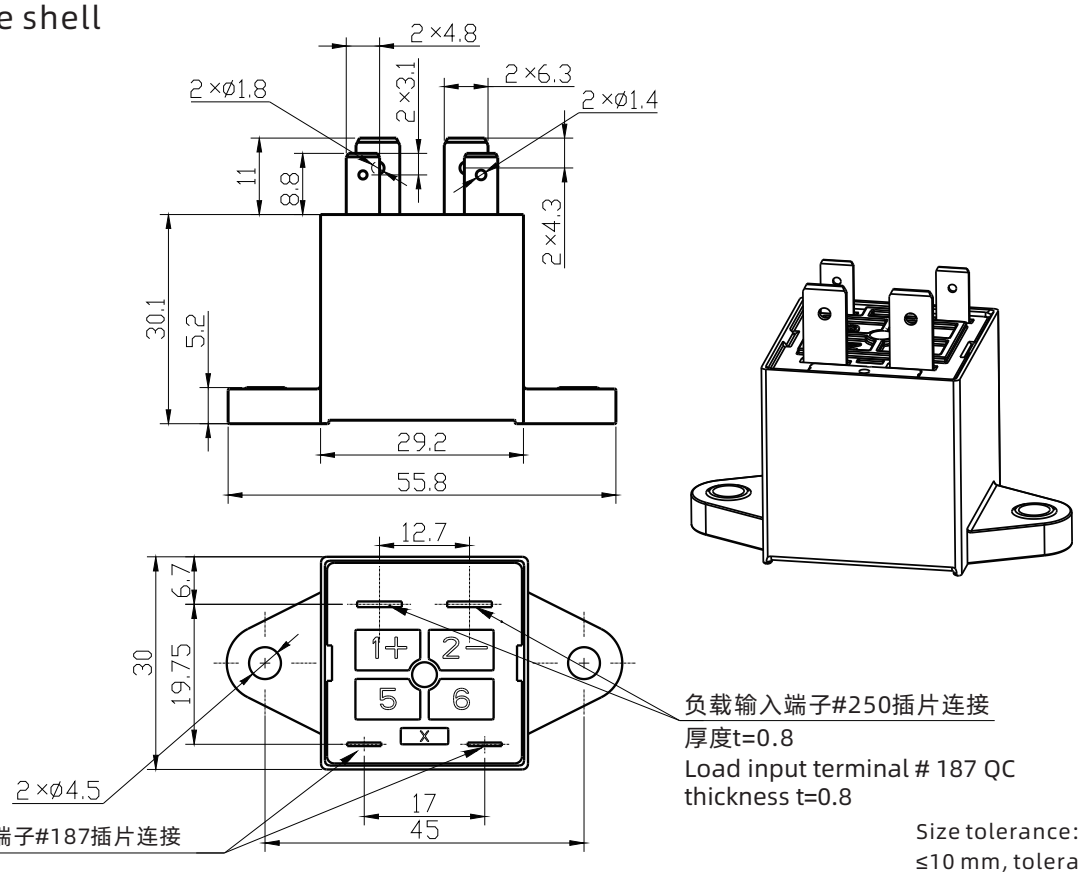

负载输入端子#250插片连接
厚度t=0.8

Load input terminal # 187 QC
thickness t=0.8

线圈输入端子#187插片连接
厚度t=0.5

Coil input terminal # 187 QC
thickness t=0.5

Size tolerance:
≤10 mm, tolerance is ±0.3 mm
10 ~ 50 mm, tolerance is ±0.5 mm
≥50 mm, tolerance is ± 0.8 mm

Dimensions

G3-type shell

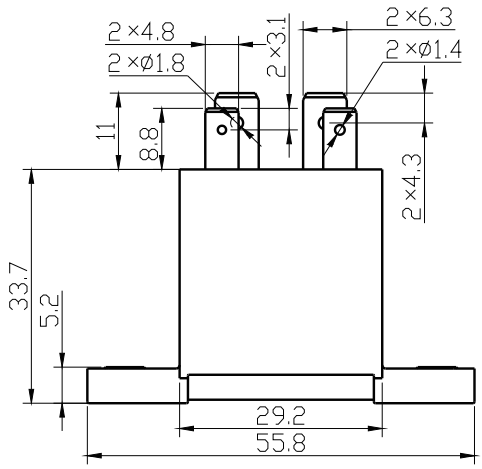

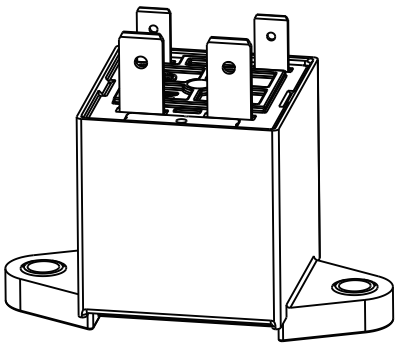

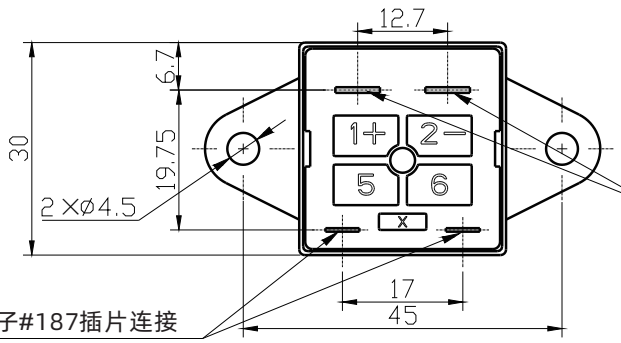

Load input terminal # 187 QC
thickness t=0.8

负载输入端子#250插片连接
厚度t=0.8

线圈输入端子#187插片连接
厚度t=0.5

Coil input terminal # 187 QC
thickness t=0.5

Size tolerance:
≤10 mm, tolerance is ±0.3 mm
10 ~ 50 mm, tolerance is ±0.5 mm
≥50 mm, tolerance is ± 0.8 mm

PCB pin hole design, Schematic diagram

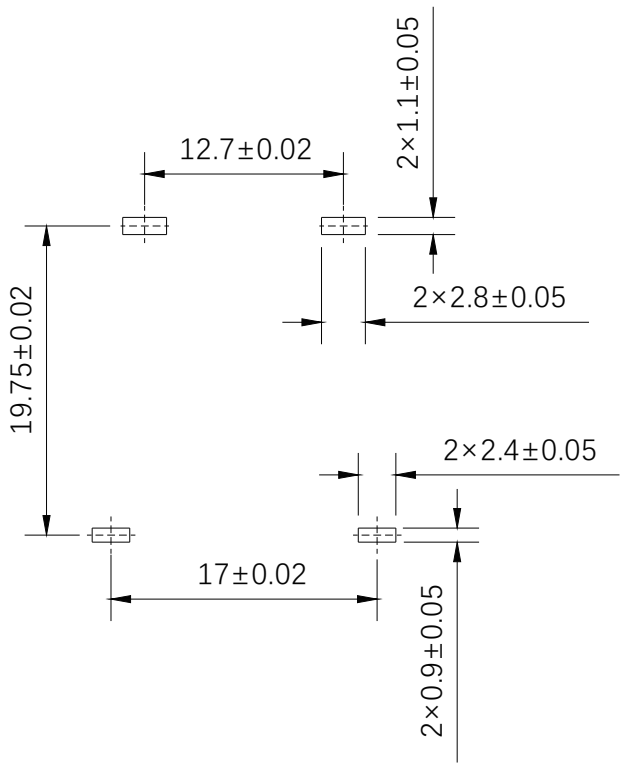

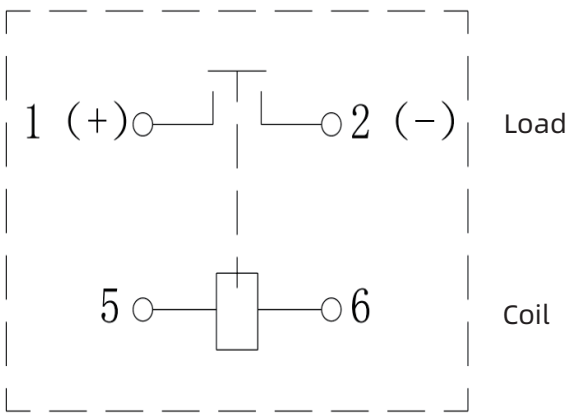

Note: The SEF40 series coils have no polarity, but the load has polarity

Product Code Structure

SEF40	-S	-M	12	P	X	XX

Special parameters: Nil-Standard type,
Letters or digits-Special requirement

Shell type: Nil-Ordinary shell,
G. G2, G3: Corresponding to special shell types

Terminal type: Nil- Quick connect terminal P: PCB terminal

Coil voltage(VDC): 12, 24, 48

Contact form:M-Form A

Sealing form: S-Plastic sealed type SH-Trial water type

Model:SEF40

Note:The customer's special requirements need to be formulated together with Sanyou.

Current carrying curve

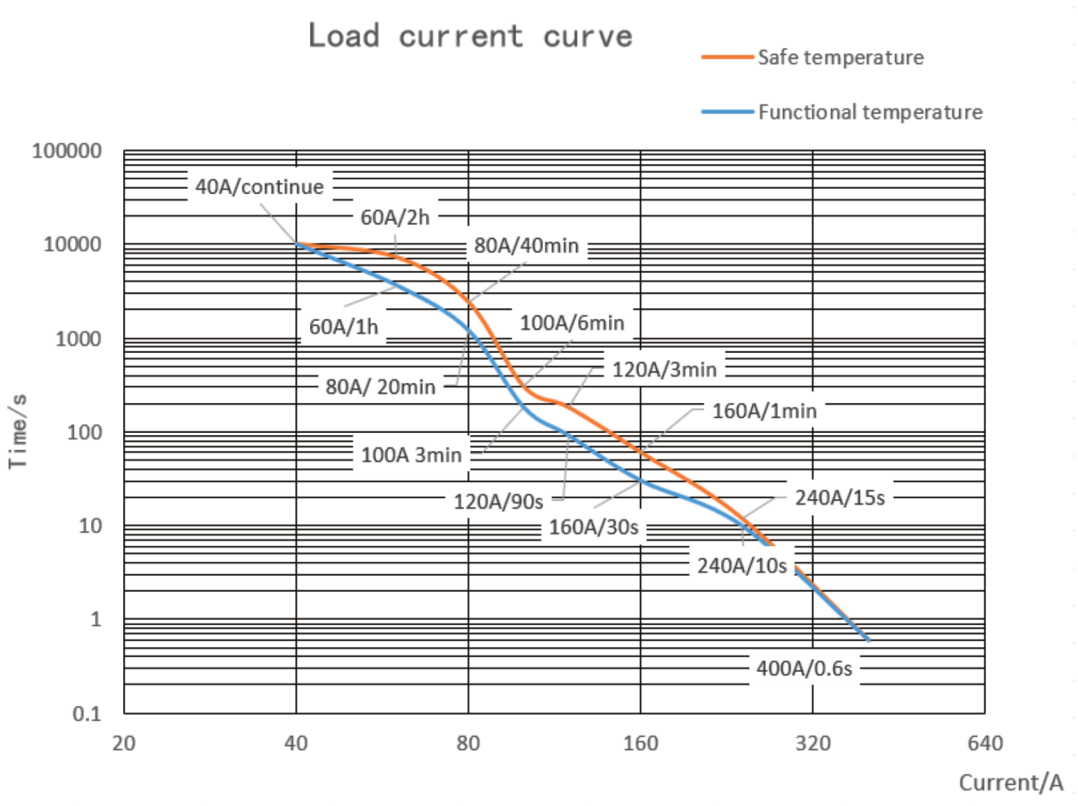

Disclaimer

This product specification is for reference only, subject to change without prior notice.It is not possible for Sanyou to evaluate all the performance parameter requirements of relays in each specific application field, so customers should choose the suitable product according to the specific application conditions. If you have any questions, please contact us for more technical support, but the customer should be responsible for product selection.

Sanyou Corporation Limited. All rights reserved